| REV. | EC# | DESCRIPTION | DATE | APPROVED |
|---|---|---|---|---|
| A | | 新版发行 | 2019.03.01 | |
| | | | | |

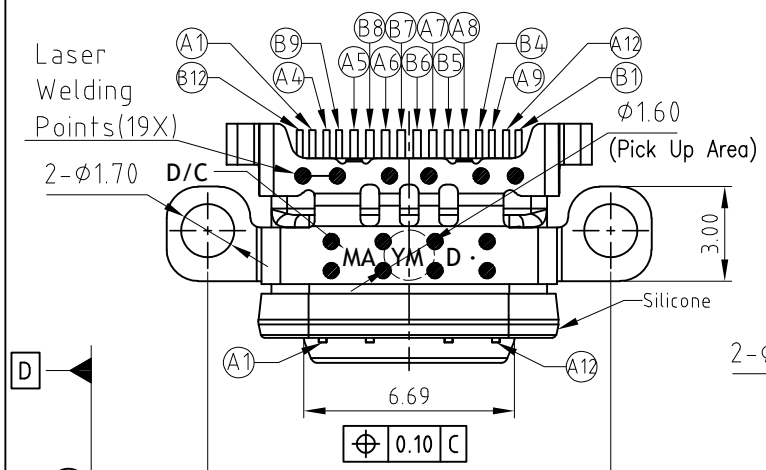


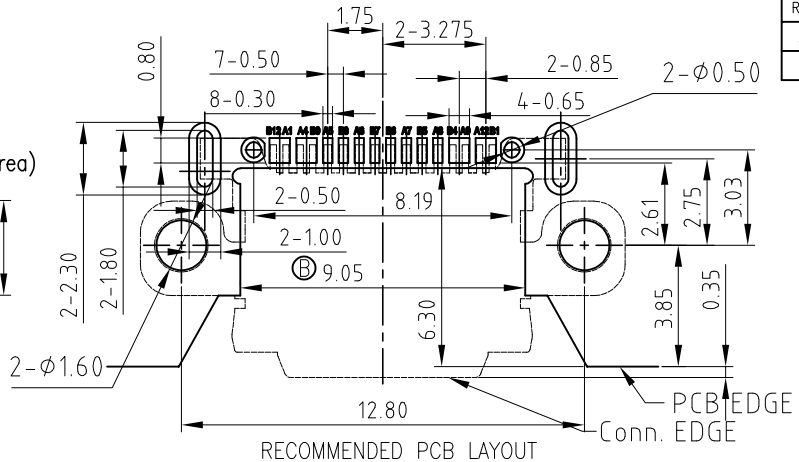


RECOMMENDED PCB LAYOUT

TOLERANCE:±0.05

(建议使用刷Sn钢板厚度0.12mm)

NOTES:

SPECIFICATION:

1. CURRENT RATING: 3.0A MAX
2. VOLTAGE: 100 VAC
3. TEMPERATURE RANGE: -30 °C ~ 85 °C
4. CONTACT RESISTANCE: 40 MILLIONHM MAX
5. INSULATION RESISTANCE: 100 MEGOHMS MIN.
6. LNSERTION FORCE : 5N~20N
7. UNMATING FORCE: 8N~20N
8. DURABILITY: 10,000 CYCLES

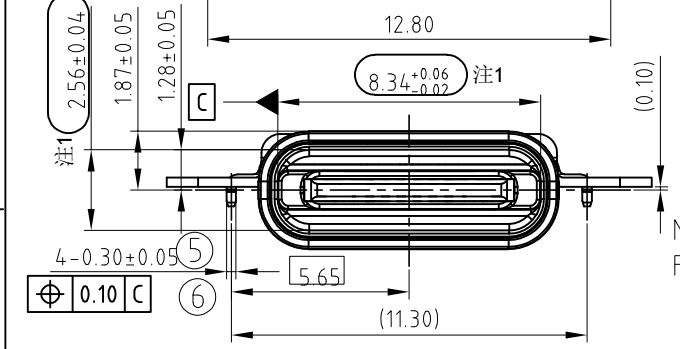


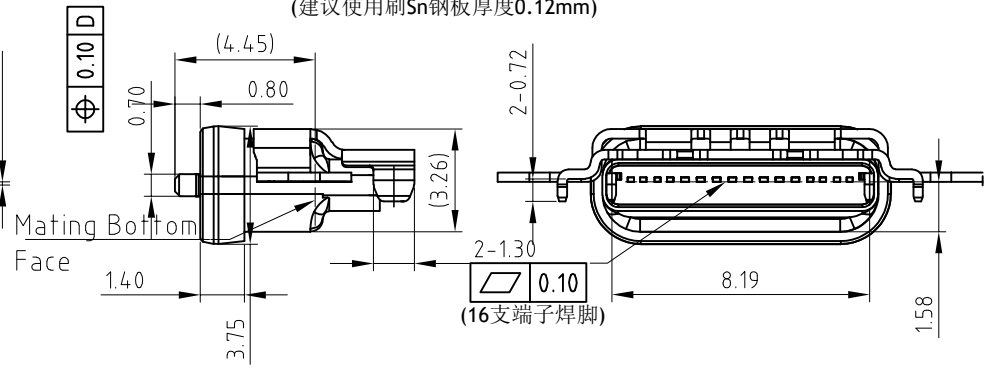


(16支端子焊脚)

Pin Assignments

| Contact Number | Signal Name | Contact Number | Signal Name |
|---|---|---|---|
| A1 | GND | B12 | GND |
| | | | |
| | | | |
| A4 | VBUS | B9 | VBUS |
| A5 | CC1 | B8 | SBU2 |
| A6 | Dp1 | B7 | Dn2 |
| A7 | Dn1 | B6 | Dp2 |
| A8 | SBU1 | B5 | CC2 |
| A9 | VBUS | B4 | VBUS |
| | | | |
| | | | |
| A12 | GND | B1 | GND |

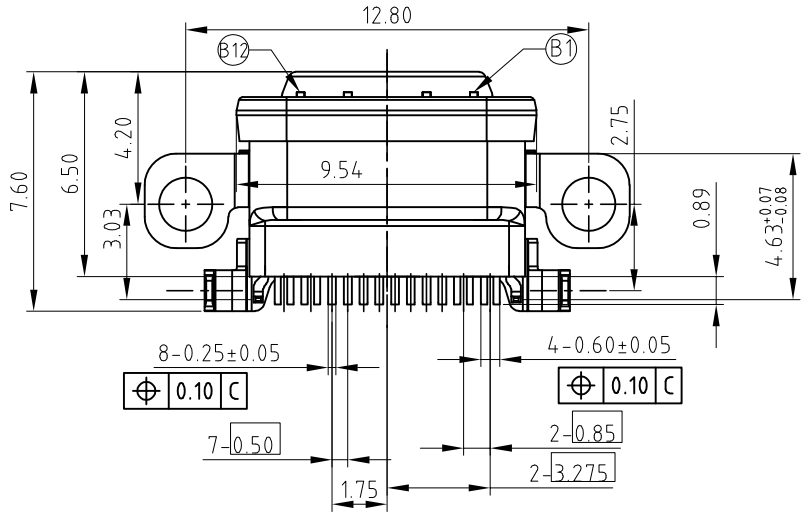


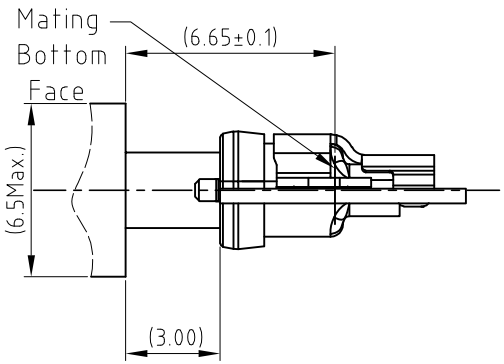


| NO. | DESCRIPTION | MATERIAL | REMARKS | QTY |
|---|---|---|---|---|
| 9 | LIM | SILICA GEL | BLACK | 1PCS |
| 8 | TOP SHELL | STAINLESS STEEL | TI/NI Plated | 1PCS |
| 7 | SHELL | STAINLESS STEEL | NI Plated | 1PCS |
| 6 | OVER MOLDING | HIGH TEMPERATURE PLASTIC | BLACK | 1PCS |
| 5 | TOP I/M | HIGH TEMPERATURE PLASTIC | BLACK | 1PCS |
| 4 | BOTTOM I/M | HIGH TEMPERATURE PLASTIC | BLACK | 1PCS |
| 3 | MID PLATE | STAINLESS STEEL | TI/NI Plated | 1PCS |
| 2 | CONTACT | COPPER ALLOY | Au/NI Plated | 1SET |
| 1 | CONTACT | COPPER ALLOY | Au/NI Plated | 1SET |

注1: "⬭"表示CPK尺寸

TOLERANCES UNLESS OTHERWISE SPECIFIED
GENERAL X. ±0.38, .X ±0.25, .XX ±0.15, .XXX ±0.05
ANGLES X.° ±3.0°, .X ±2.0°, .XX ±1.0°

SCALE
SHEET 1 OF 1
UNIT mm

PART NUMBER: XB-TYPE-C 16PIN-CUT

APPROVED DATE
CHECKED DATE
DESIGN DATE 2019.03.01

东莞市溪榜电子有限公司
DONG GUAN XI BANG ELECTRONI CS CO., LTD.

TITLE Customer Drawing for
USB Type-C 母 16pin 沉板1.58
防水型IPX7/X8,外露0.8 成品

SERIES XB-TYPE-C 16PIN-CUT
SIZE A4
DWG NO.
REV. A

This document and information contained herein are the property of Xibang Electronics copies are issued in strict confidence and shall not be reproduced or copied, or used as the basic of manufacture or sale of apparatus without permission

All materials meet the Xibang Electronics spec. environment-related substances management technical standard